Western Products, PO Box 245038, Milwaukee, WI 53224-9538 • www.westernplows.com

October 1, 2026
Lit. No. 43790, Rev. 01

HTS™ Snowplow

Blade Assembly 69500
Center Assembly 42420-1

Parts List

A DIVISION OF DOUGLAS DYNAMICS, LLC

TABLE OF CONTENTS

HTS™ BLADE ASSEMBLY 4
HTS CENTER ASSEMBLY 6
Lift Frame and A-Frame Components 6
Hydraulic Unit Components 8
Lift and Angle Ram Components 10
Hoses and Fittings 10
Electrical Components 11
Vehicle-Side Harness Diagram – 3-Port, 2-Plug Systems 12
Headlamp Kit 13

Blade Components

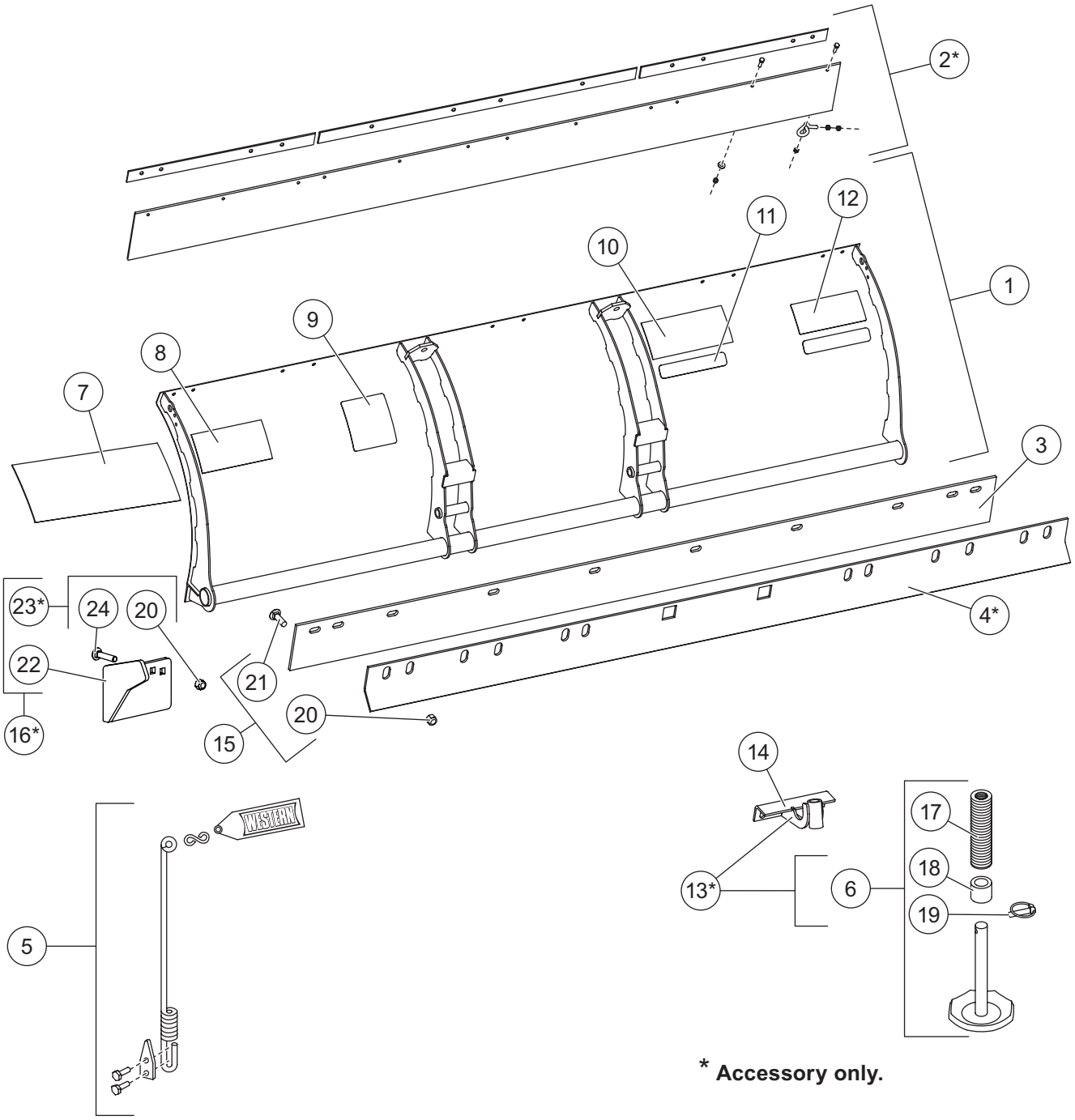

* Accessory only.

69500 Blade Components							
Item	**Part**	**Qty**	**Description**	**Item**	**Part**	**Qty**	**Description**
1	69490	1	7'6" Blade	11	28404	1	Label – Identity, ULTRAFINISH™
2*	62123-1	1	Rubber Deflector Kit, 7'6"	12	44451	1	Label – Identity, WESTERN 8.31
3	69505	1	5/16 x 6 x 90 Cutting Edge (w/o hardware)	ns	69499	1	Cutting Edge Assembly (w/hardware)
				13*	69570	1	Shoe Kit
4*	64758	1	Back Drag Edge, 7'6"	14	69455	2	Shoe Bracket
5	59700	1	Blade Guide & Flag Assembly Kit, 24"	15	69425	1	Cutting Edge Bolt Bag
6	49067	2	Disc Shoe Assembly	16*	43885	1	Curb Guard Kit
7	69489	1	Label – Identity, WESTERN® Moldboard	17	91192	52	Round Flat Washer, Special
8	74593	1	Label – Warning, Attach/Detach	18	60045	2	Spacer
9	59900	1	Label – Warning/Caution, Snowplows	19	93010K	2	7/16 x 1-3/4 Linchpin
10	94859	1	Label – Identity, HTS				
Item 5			**59700 Blade Guide & Flag Assembly Kit, 24"**				
	59691	2	Blade Guide Rod 24"		59946	2	Clamp
	59696	2	S-Hook		68494	4	5/16-18 x 1 Hex Cap Screw G5
	59694K	2	Blade Guide Flag		91332	4	5/16-18 Hex Locknut GB
Item 6			**49067 Disc Shoe Assembly**				
		1	Disc Shoe	18	60045	1	Spacer
17	91192	26	Round Flat Washer, Special	19	93010K	1	7/16 x 1-3/4 Linchpin
Item 13*			**69570 Shoe Kit**				
6	49067	2	Disc Shoe Assembly	14	69455	2	Shoe Bracket
Item 15			**69425 Cutting Edge Bolt Bag**				
20		10	5/8-11 Hex Locknut GB	21		10	5/8-11 x 2 Carriage Bolt G5
Item 16*			**43885 Curb Guard Kit**				
22	43896	1	Curb Guard – DS	23*	44421	1	Curb Guard Bolt Bag
ns	43897	1	Curb Guard – PS				
Item 23*			**44421 Curb Guard Bolt Bag**				
20		4	5/8-11 Hex Locknut GB	24		4	5/8-11 x 3 Carriage Bolt G5
			ns = not shown				G = Grade

* Accessory only.

Lift Frame and A-Frame Components

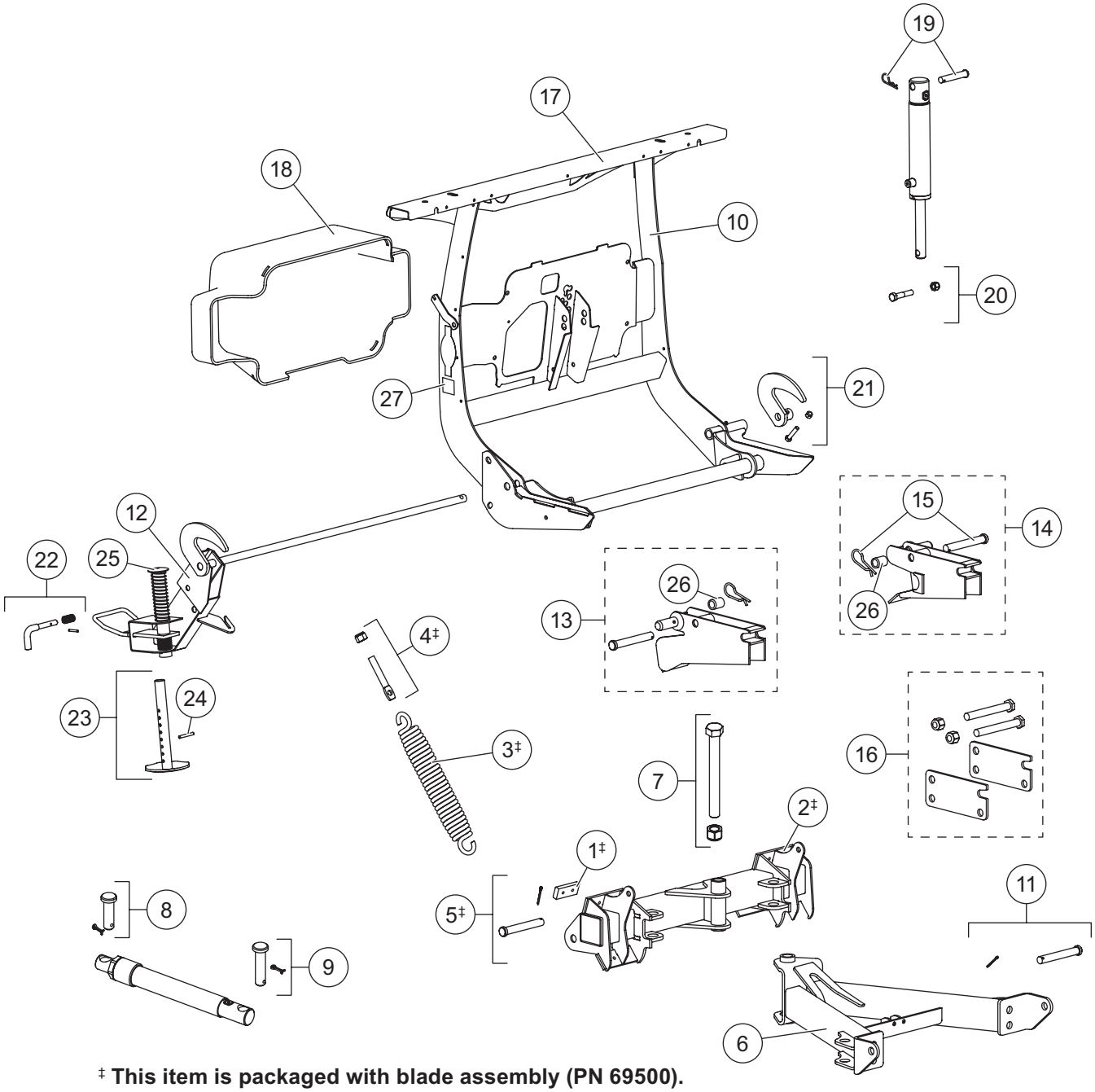

‡ **This item is packaged with blade assembly (PN 69500).**

HTS Lift Frame and A-Frame Components							
Item	**Part**	**Qty**	**Description**	**Item**	**Part**	**Qty**	**Description**
1‡	63976	1	Kit, Bumper	15	69663	2	Receiver Retaining Pin Kit
2‡	69515	1	Quadrant Assembly, HTS	16	69620	1	Height Adjustment Plates Kit (per side)
3‡	23039	2	Trip Spring	17	69509	1	Light Bar
4‡	66421	2	5/8-11 x 4 Eyebolt Kit	18	69512	1	Hydraulic Cover
5‡	69659	2	3/4 x 6 Clevis Pin Kit	19	50653	1	5/8 x 3-1/2 Pin Kit
6	69523	1	A-Frame	20	69514	1	Lift Ram Pin Kit (Rod)
7	69494	1	Pivot Bolt Kit	21	69508	1	Hook w/Hardware – PS
8	63973	2	Ram Pin Kit	22	67844	1	Stand Lock Pin Kit
9	69496	2	Ram Pin Kit	23	67847	1	Stand Shoe Kit
10	69497	1	Lift Frame Kit	24	67635	1	1/4 x 2 Roll Pin BP
11	93062K	2	Clevis Pin Kit	25	48523	1	Stand Plunger Assembly
12	69498	1	Stand Assembly	26	63212	1	Spacer
13	69611	1	Receiver Kit – DS	27	69689	1	Label – SECURITY GUARD™
14	69610	1	Receiver Kit – PS				

‡ Packaged with blade assembly (PN 69500).

Hydraulic Unit Components

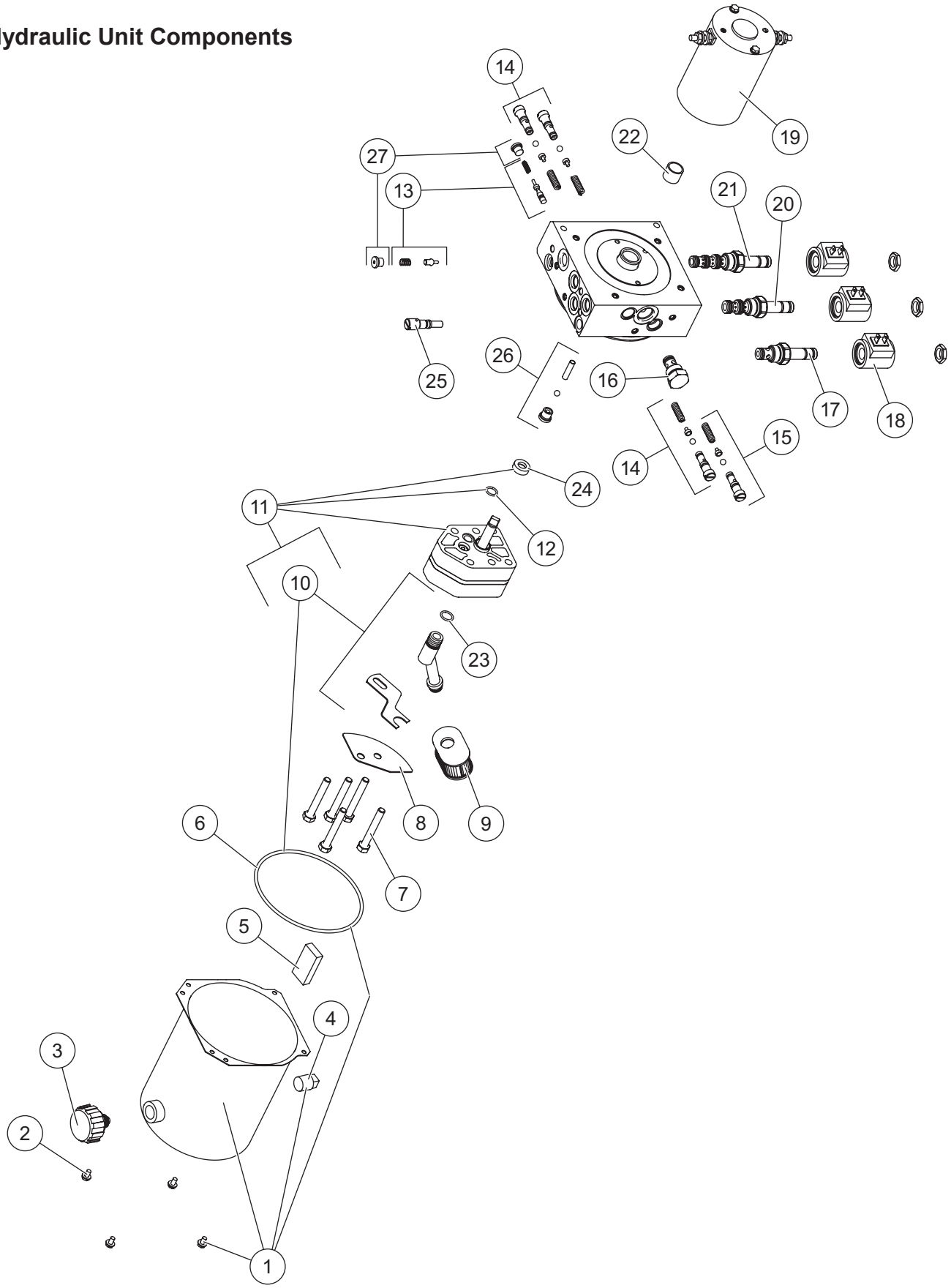

69630 Hydraulic Unit (including electrical components on page 11)							
Item	**Part**	**Qty**	**Description**	**Item**	**Part**	**Qty**	**Description**
1	48538	1	Reservoir Kit	14	49138K-4	1-1/2	Relief Valve Kit (2 sets)
2	66607	4	10-24 x 5/16 Machine Screw Slotted Hex Washer Head	15	27792-1	1	Relief Valve Repair Kit
				16	44334-1	1	Check Valve CV08-20
3	21727-2K	1	Breather 3/8 NPT Kit	17	49227K-2	1	Valve, 2-Way w/Nut
4	92079	1	Plug, Square 3/8 NPTF	18	49230K-2	3	Coil w/Spade Terminals
5	73897	1	Magnet	19	48543-1	1	Motor Assembly, 3"
6	66519	1	O-Ring 2-250	20	66608-1	1	Valve, 3-Way w/Nut
7	90073	5	5/16-18 x 2-1/4 Hex Cap Screw G5	21	49229K-1	1	Valve, 4-Way w/Nut
8	48464	1	Plate Baffle	22	56364*	1	Bearing, Sleeve
9	56789-4	1	Suction Filter	23	56416	1	O-Ring -014
10	66763-1	1	Inlet Fitting/Filter Kit	24	66515**	1	Pump Shaft Seal
11	21501-1	1	Hydraulic Pump Kit	25	48517	1	Quill
12	56274	1	O-Ring -013	26	48518	1	Check Valve Assembly
13	49226K	1	Poppet Check Valve Kit	27	92960	2	Plug, Hex Socket –3 M ORB
O-Ring Service Kits							
ns	56657-4	–	O-Ring & Back-Up Ring Kit	ns	49259-2	–	Seal Kit, 3-Way and 4-Way Valve
ns	49258-2	–	Seal Kit, 2-Way Valve				
ns = not shown			M = Male				G = Grade

* Use 64589 tool to install (includes 56364).

** Use 28856 tool to install (includes 66515).

Lift and Angle Ram Components

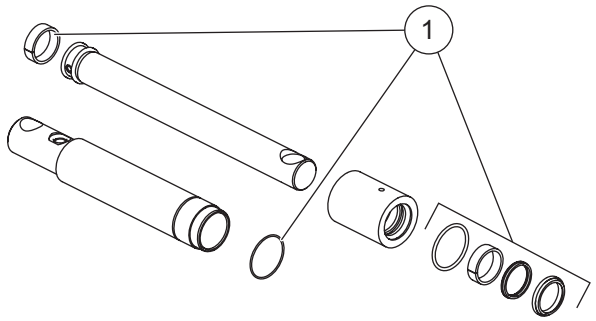

43799 Angle Ram Assembly 1-1/2 x 8			
Item	**Part**	**Qty**	**Description**
1	43791	1	Seal Kit 1-1/2 SA

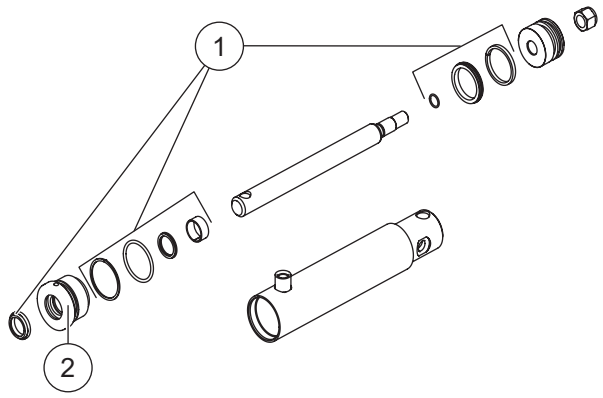

69513 Lift Ram Assembly 2 x 6-3/4 DA			
Item	**Part**	**Qty**	**Description**
1	48520	1	Seal Kit 2 x 6-3/4 DA
2	48451	1	Gland 1"

Hoses and Fittings

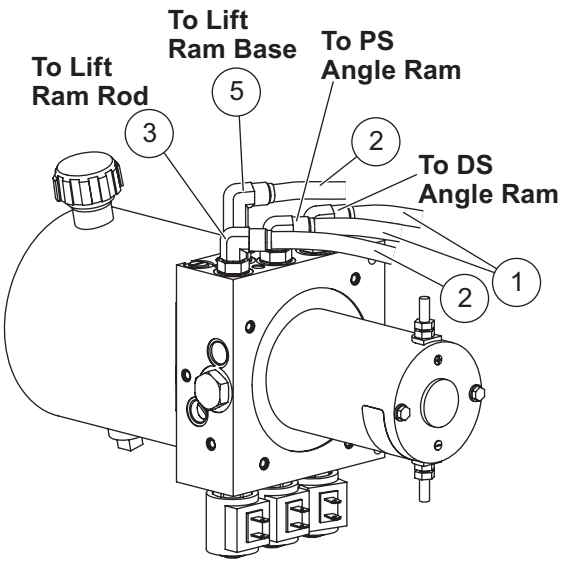

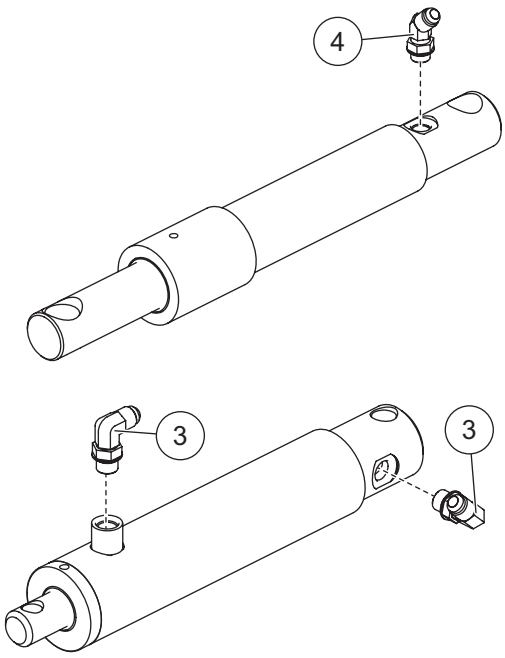

Hoses and Fittings							
Item	**Part**	**Qty**	**Description**	**Item**	**Part**	**Qty**	**Description**
1	48519	2	Hose, 1/4 x 32 w/F JIC Ends	5	64212-1	1	Elbow, Extra Long 90° –6 M JIC/ –6 M ORB
2	56830	2	Hose, 1/4 x 22 w/FJIC Ends				
3	56615-1	5	Elbow, 90° –6 M JIC/–6 M ORB	ns	56823	1	Hose Wrap
4	26694	2	Elbow, 45° –6 M JIC/–6 M ORB				
F = Female				M = Male			ns = not shown

Electrical Components

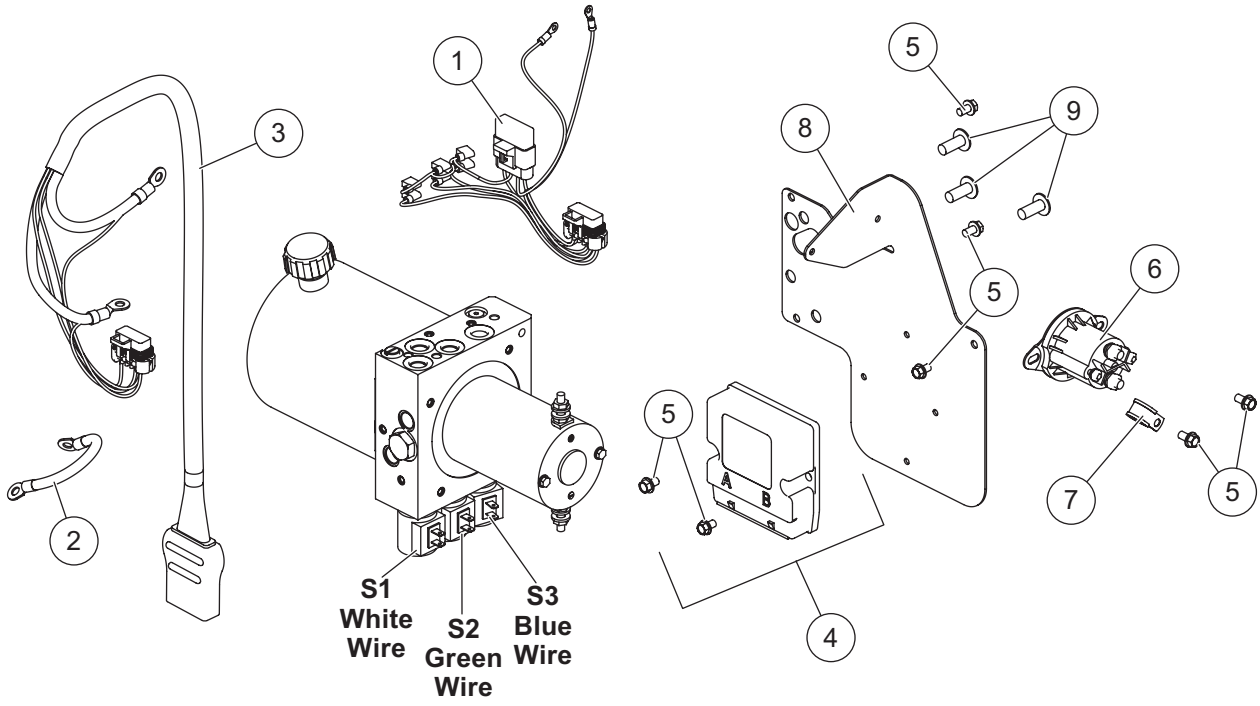

Plow-Side Electrical Components							
Item	**Part**	**Qty**	**Description**	**Item**	**Part**	**Qty**	**Description**
1	28581-1	1	Harness Plow Control, 3-Solenoid	6	42902	1	Motor Relay Kit FLEET FLEX
2	29071	1	Cable Assembly 8"	7	65340	1	Clamp Loop #10
3	42015	1	Snowplow Battery Cable	8	48522	1	Hydraulic Plate
4	49567	1	Plow Module, 2-Port	9	98043	3	3/8-16 x 1 Button Cap Screw
5	43988	7	1/4-20 x 3/8 Hex Washer-Head Thread-Rolling Screw				
Vehicle-Side Electrical Components							
*	42014	1	Vehicle Battery Cable	ns	61548K	2	Plug Cover Kit
*	28587	1	Vehicle Control Harness				
ns = not shown							

* For diagram see Vehicle-Side Harness Diagram.

Vehicle-Side Harness Diagram
3-Port, 2-Plug System

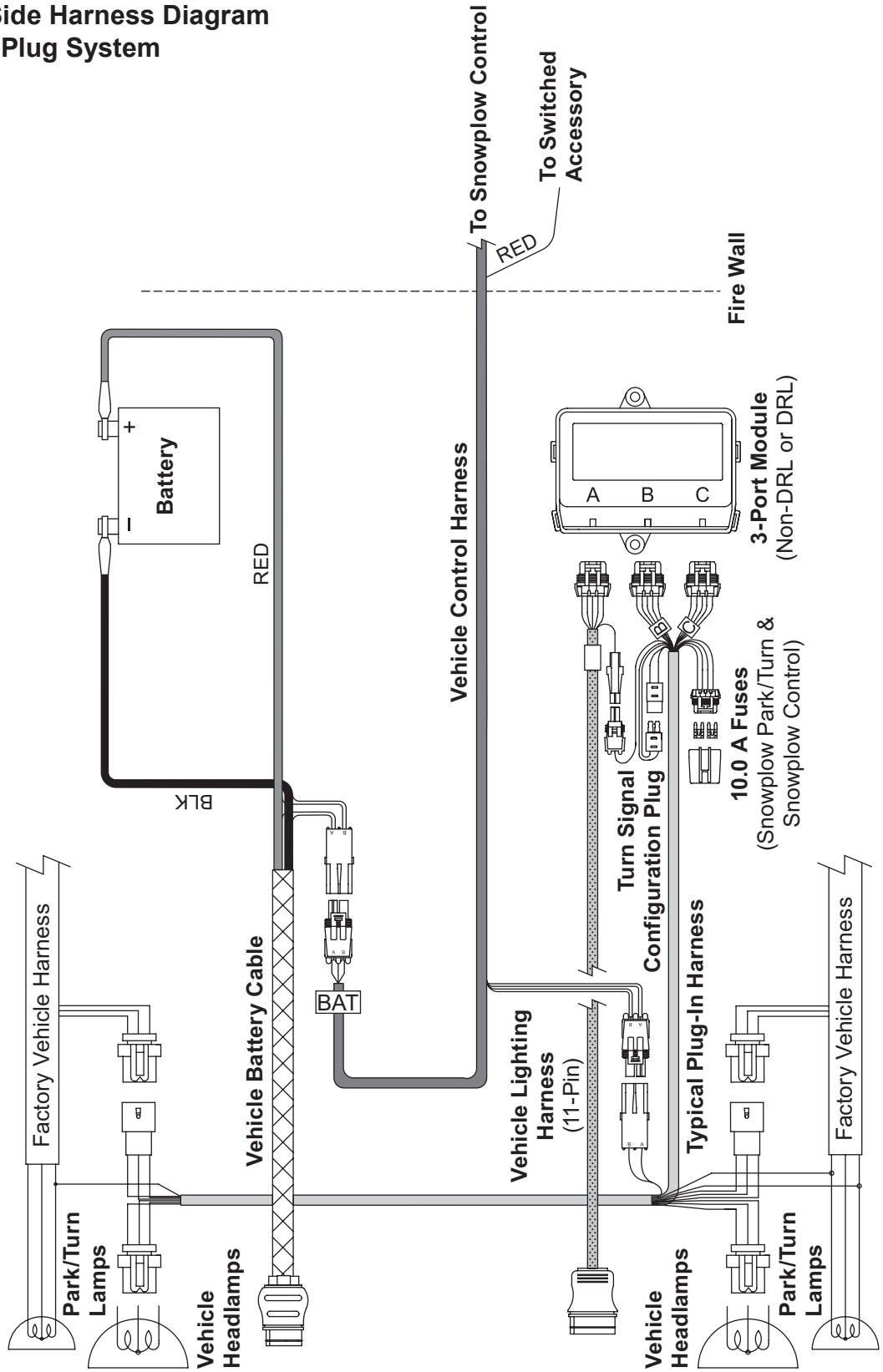

Headlamp Kit

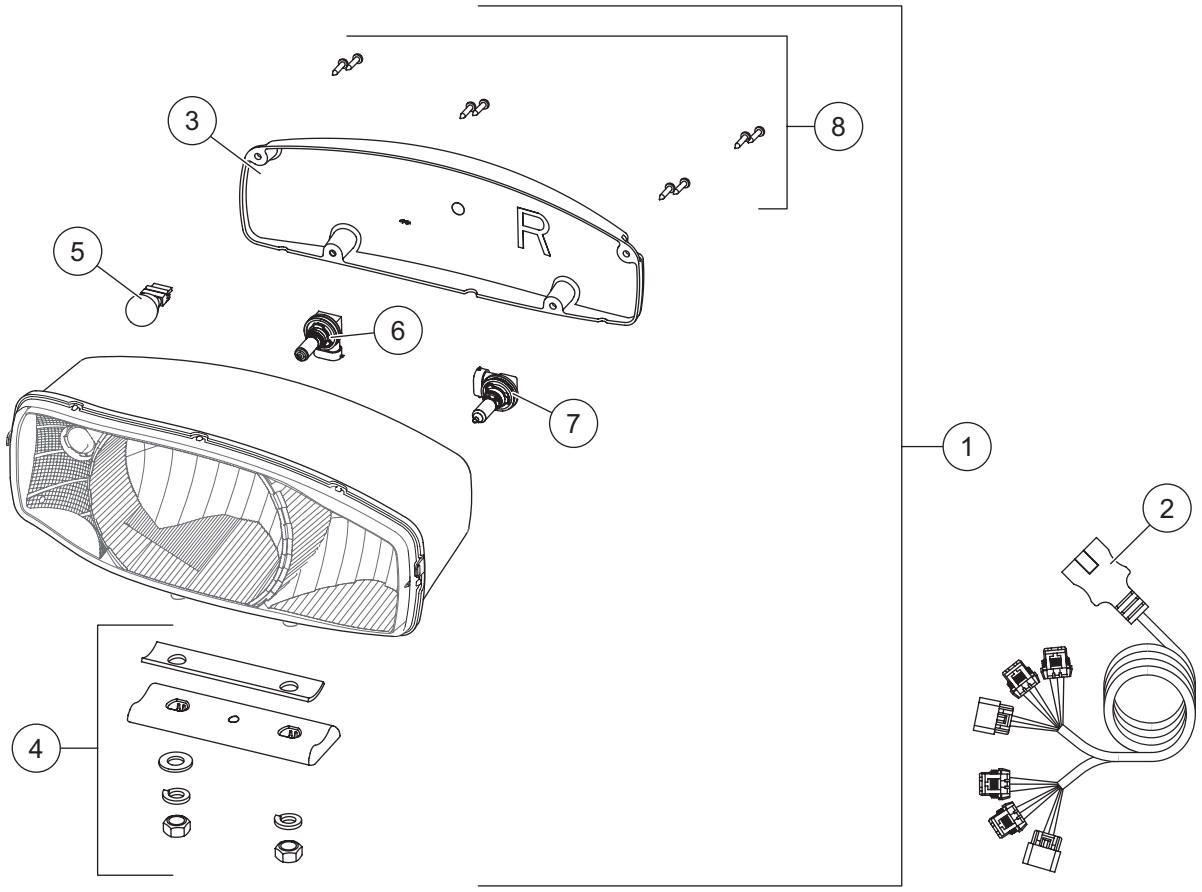

38800 Headlamp Kit H9/H11 (pair)							
Item	**Part**	**Qty**	**Description**	**Item**	**Part**	**Qty**	**Description**
1	38802	1	Headlamp Service Kit H9/H11 PS	2	38807	1	Harness Service Kit H9/H11
ns	38801	1	Headlamp Service Kit H9/H11 DS				
Item 1	**38801/38802 Headlamp Service Kit H9/H11 PS/DS**						
3	38803	1	Rear Cover Kit H9/H11 PS	6	38811	1	H11 Headlamp Bulb Service Kit
ns	38812	1	Rear Cover Kit H9/H11 DS	7	38809	1	H9 Headlamp Bulb Service Kit
4	38804	1	Mounting Hardware Kit H9/H11	8	38808	1	Cover Screws Service Kit H9/H11 (pkg of 4)
5		1	Park/Turn Bulb (Trade No. 4157NAK)				
ns = not shown							

Western Products
PO Box 245038
Milwaukee, WI 53224-9538
www.westernplows.com

A DIVISION OF DOUGLAS DYNAMICS, LLC

Copyright © 2026 Douglas Dynamics, LLC. All rights reserved. This material may not be used, reproduced, or copied in any manner, in whole or in part, in any printed, mechanical, electronic, film, or other distribution and storage media, nor analyzed or manipulated in any manner for the purpose of training artificial intelligence technologies or systems, without the written consent of Western Products. In accordance with Article 4(3) of the Digital Single Market Directive 2019/790, Western Products expressly reserves this work from the text and data mining exception. Authorization to photocopy items for internal or personal use by Western Products outlets or equipment owner is granted.

Western Products reserves the right under its product improvement policy to change construction or design details and furnish equipment when so altered without reference to illustrations or specifications used. Western Products or the vehicle manufacturer may require or recommend optional equipment for snow removal. Do not exceed vehicle ratings with a snowplow. Western Products offers a limited warranty for all snowplows and accessories. See separately printed page for this important information. The following are registered (®) or unregistered (™) trademarks of Douglas Dynamics, LLC: HTS™, SECURITY GUARD™, ULTRAFINISH™, UltraMount® 2, WESTERN®.

Printed in U.S.A.